活塞连杆部分 Piston and connecting Rod

序号 No.	零部件图号 Part No.	名称	Part Name	每台数量 Qty												规格标准 Standard Specification
				HOWO						A7						
				D12.34-30	D12.38-30	D12.42-30	D12.46-30			D12.34-30	D12.38-30	D12.42-30	D12.46-30			
1	VG1246030001	活塞	Piston	6	6	6	6			6	6	6	6			
2	VG1246030002	活塞销	Piston pin	6	6	6	6			6	6	6	6			
3	VG1246030003	活塞销挡圈	Retaining ring	12	12	12	12			12	12	12	12			
4	VG1246030004	梯形环	Double ladder ring	6	6	6	6			6	6	6	6			
5	VG1246030005	锥面环	Conical ring	6	6	6	6			6	6	6	6			
6	VG1246030006	螺旋撑簧油环	Spiral spring oil ring	6	6	6	6			6	6	6	6			
-	AZ1246030007	连杆总成	Connecting rod assembly	6	6	6	6			6	6	6	6			
7	AZ1246030008	连杆体	Connecting rod	6	6	6	6			6	6	6	6			
8	AZ1246030009	连杆盖	Connecting rod cover	6	6	6	6			6	6	6	6			
9	VG1246030010	连杆衬套	Connecting rod bush	6	6	6	6			6	6	6	6			
10	VG1246030013	连杆螺栓	Connecting rod bolt	12	12	12	12			12	12	12	12			
11	VG1246030011	连杆上瓦	Connecting rod bearing (top)	6	6	6	6			6	6	6	6			
12	VG1246030012	连杆下瓦	Connecting rod bearing (down)	6	6	6	6			6	6	6	6			
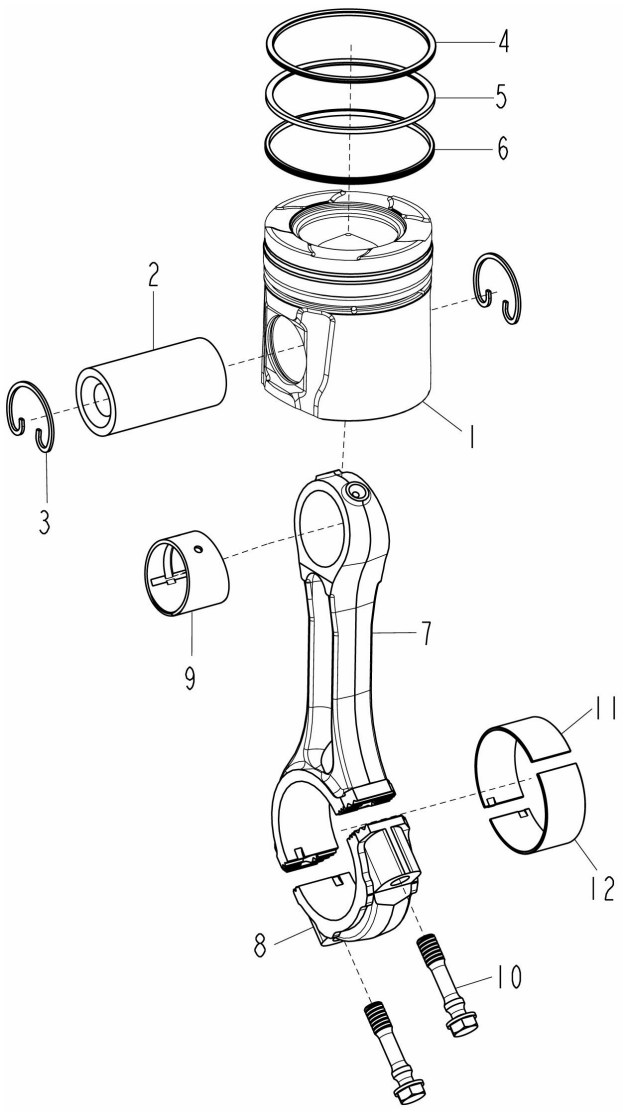
活塞连杆部分 Piston and connecting Rod